Electro Optical Components, Inc.
5460 Skylane Boulevard, Santa Rosa, CA 95403
Toll Free: 855-EOC-6300
www.eoc-inc.com | info@eoc-inc.com

Click to go to Product Selector

ifw optronics

SiC-quadrant-photodiode JQC5R

preliminary data sheet

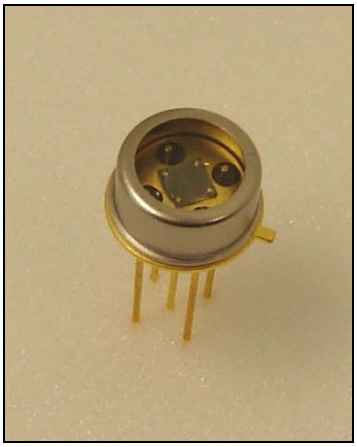

characteristics :

- monolithic SiC-quadrant-photodiode with common cathode
- active area: 4 x 1,25 mm²
- spectral range: 215 … 360 nm
- high UV responsivity: 0,16 A/W
- hermetically sealed TO39-package
- component is ROHS and WEE conform

applications :

- center detection of laser beams
- high resolution autocollimators
- xy – coordinate measuring machines
- fibre optical acceleration- and angle sensors
- application with need of high position resolution

maximum ratings :

- reverse voltage 20 V
- operating temperature range - 40 °C ... 100 °C
- storage temperature range - 40 °C ... 100 °C
- soldering temperature (3s) 260 °C

technical data :

test conditions, as not otherwise specified: T_A = 25 °C , V_R = 10 V
values are valid for one quadrant, as not otherwise specified !

parameter	test condition	min.	typ.	max.	unit
active area			1,25		mm²
diameter of active area			2,525		mm
separation gap			32		µm
maximum of spectral responsivity S_{max} at			270		nm
spectral range λ_{min} λ_{max}	S = 0,1 x S_{max}		 215 360		nm
absolute spectral responsivity	λ = 254 nm		0,14		A/W
dark current I_R	E = 0 lx		100		fA
risetime t_r of photo current	R_L = 50 Ω λ = 254 nm I_P = 10 µA		tbc		ns
capacitance	F = 1 MHz E = 0 lx		250		pF

relative spectral responsivity

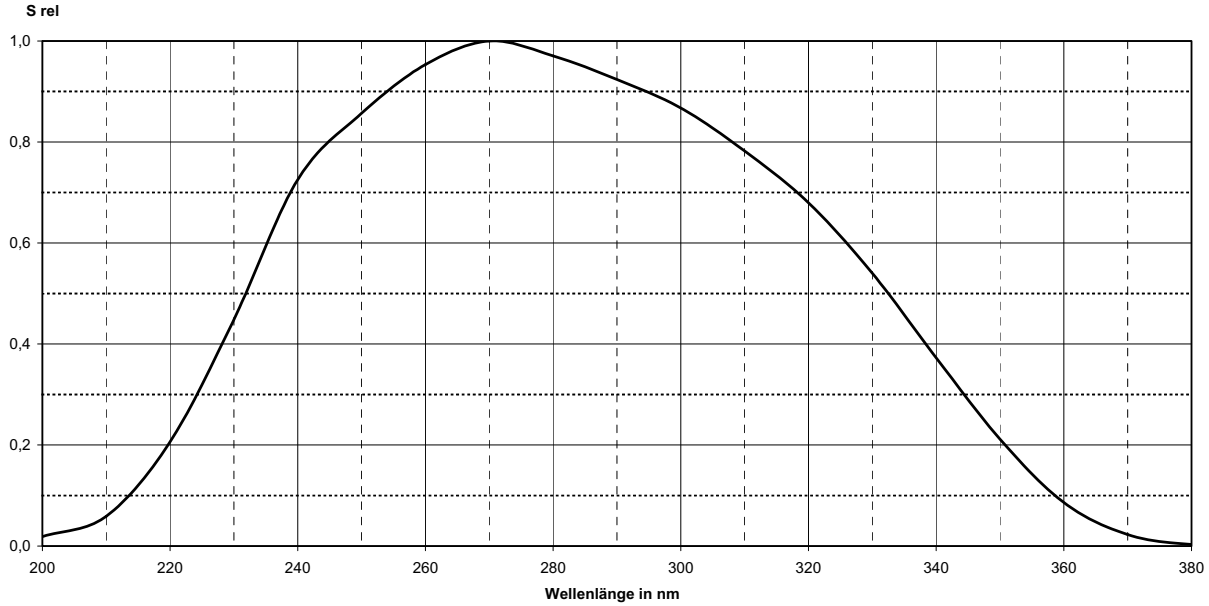

package dimension

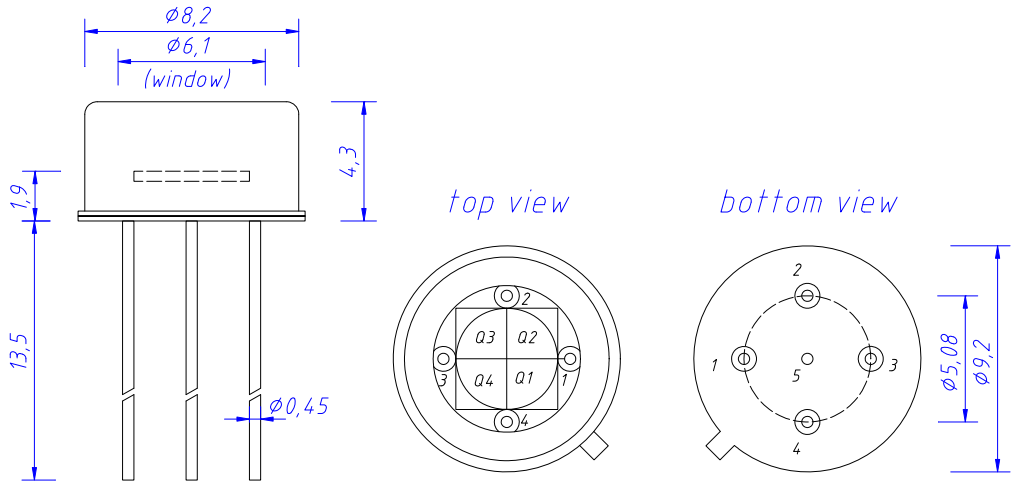

pin configuration

1 anode quadrant 1
2 anode quadrant 2
3 anode quadrant 3
4 anode quadrant 4
5 catode & case